Year 5 Home Learning – week beginning 8th June 2020

Please find below a list of activities that we would like you to complete this week. Please do not try to do all of these activities in one day; spread them out over the week so that you are doing some school related work throughout each day as if you were in school. Try to work between the hours of 9am and 3pm and make sure that you have regular breaks. If you are unsure about an aspect of the work set, please message your teacher on Class Dojo.

The BBC are still running their Bitesize daily lessons. You can access these online or through the red button service on your television.
There is also the Oak Nation Academy. This is a virtual school that provides online resources and lessons. It might be useful.

Please note, from Monday 8th June, the staff are now in school most of the week either running child care groups or teaching Year 6 and so there will be much less contact on Dojo. We will still check in every day but won't have the time to individually respond to all work.

Religious Education:
Last week was the feast of Pentecost. This is a lovely choral service you might want to watch.
1. Draw a pentagon
2. Read what Luke tells us happened. Look carefully for where everyone is (the setting) and who is there (the characters). Read twice if you want to!

'When the day of Pentecost had come, they were all together in one place. And suddenly from heaven there came a sound like the rush of a violent wind, and it filled the entire house where they were sitting. Divided tongues, as of fire, appeared among them, and a tongue rested on each of them. All of them were filled with the Holy Spirit and began to speak in other languages, as the Spirit gave them ability. Now there were devout Jews from every nation under heaven living in Jerusalem. And at this sound the crowd gathered and was bewildered, because each one heard them speaking in the native language of each. Amazed and astonished, they asked, 'Are not all these who are speaking Galileans? And how is it that we hear, each of us, in our own native language?'

3. Draw what happens, according to Luke, in your pentagon.

Luke tells us that the festival we call Pentecost was actually a Jewish festival called Shavu'ot. It was a festival which thanked God for the gift of both the first fruits and crops of the season and for the gift of the Torah (The first 5 books of Jewish scripture). Israelites from all around would gather in Jerusalem and bring with them the very first fruits and crops of the season, to give as a gift to God at the Temple.

4. Look at this website. Find more information about each of the **5 things Jews do** to celebrate Shavu'ot. Draw and write these things into a pentagon.

5. Make a list of some of the other things Jews do to celebrate Shavu'ot in their homes now.

Numeracy: This week we will be revising area and perimeter.

Area lesson
Area homework
Perimeter lesson
Perimeter homework

For the Power Maths end of unit check, scroll down to the bottom of this document.
Try and go on TimesTables Rockstars as often as possible, we will be setting battles for you every day!

Literacy: Please see the separate document for your English work.
Here are your spellings for this week:

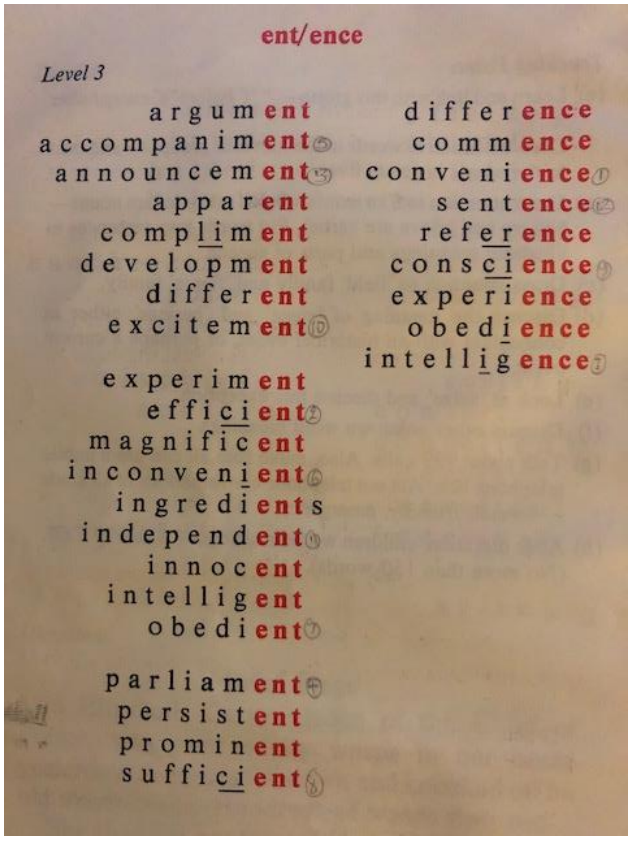

ent/ence

Level 3

argument
accompaniment
announcement
apparent
compliment
development
different
excitement

experiment
efficient
magnificent
inconvenient
ingredients
independent
innocent
intelligent
obedient

parliament
persistent
prominent
sufficient

difference
commence
convenience
sentence
reference
conscience
experience
obedience
intelligence

Topic/Art: Our new topic this half term is London. For your first piece of work, we would like you look at one of the most iconic symbols of our city, the London Underground map.

You can find out more about the creation of this map here.

The newest rail line is called the Elizabeth line. Can you draw the Elizabeth line on to the existing map?

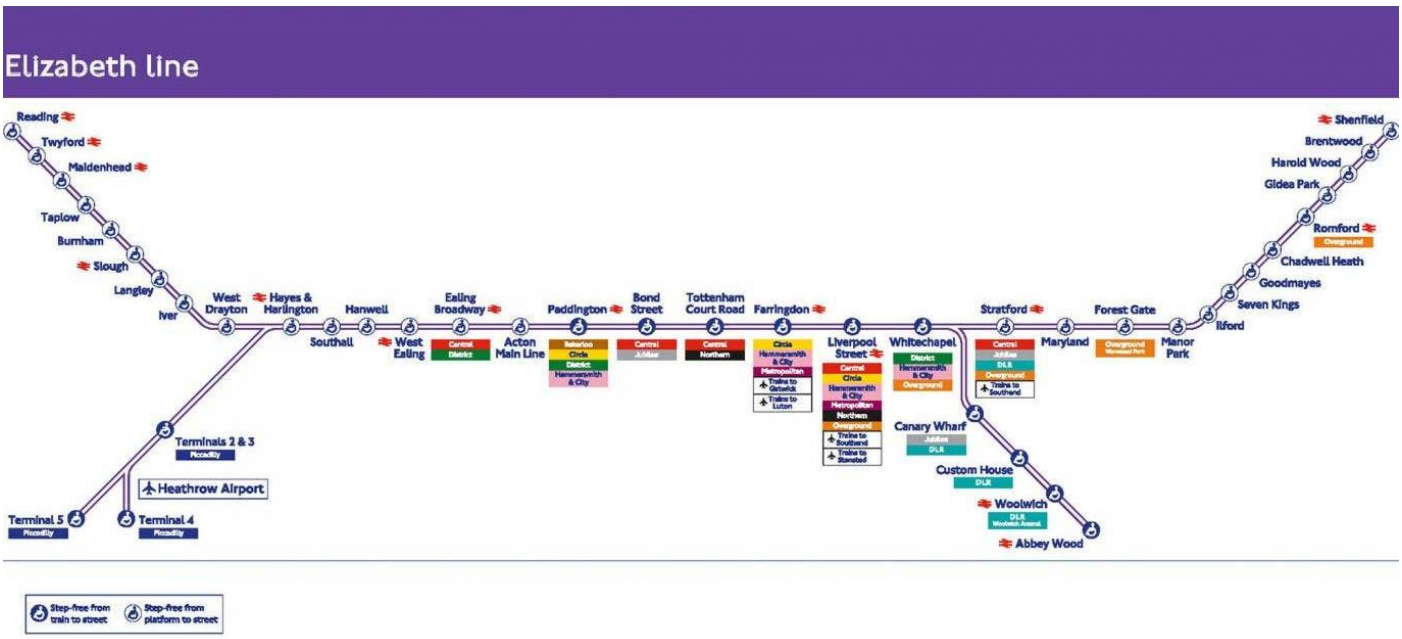

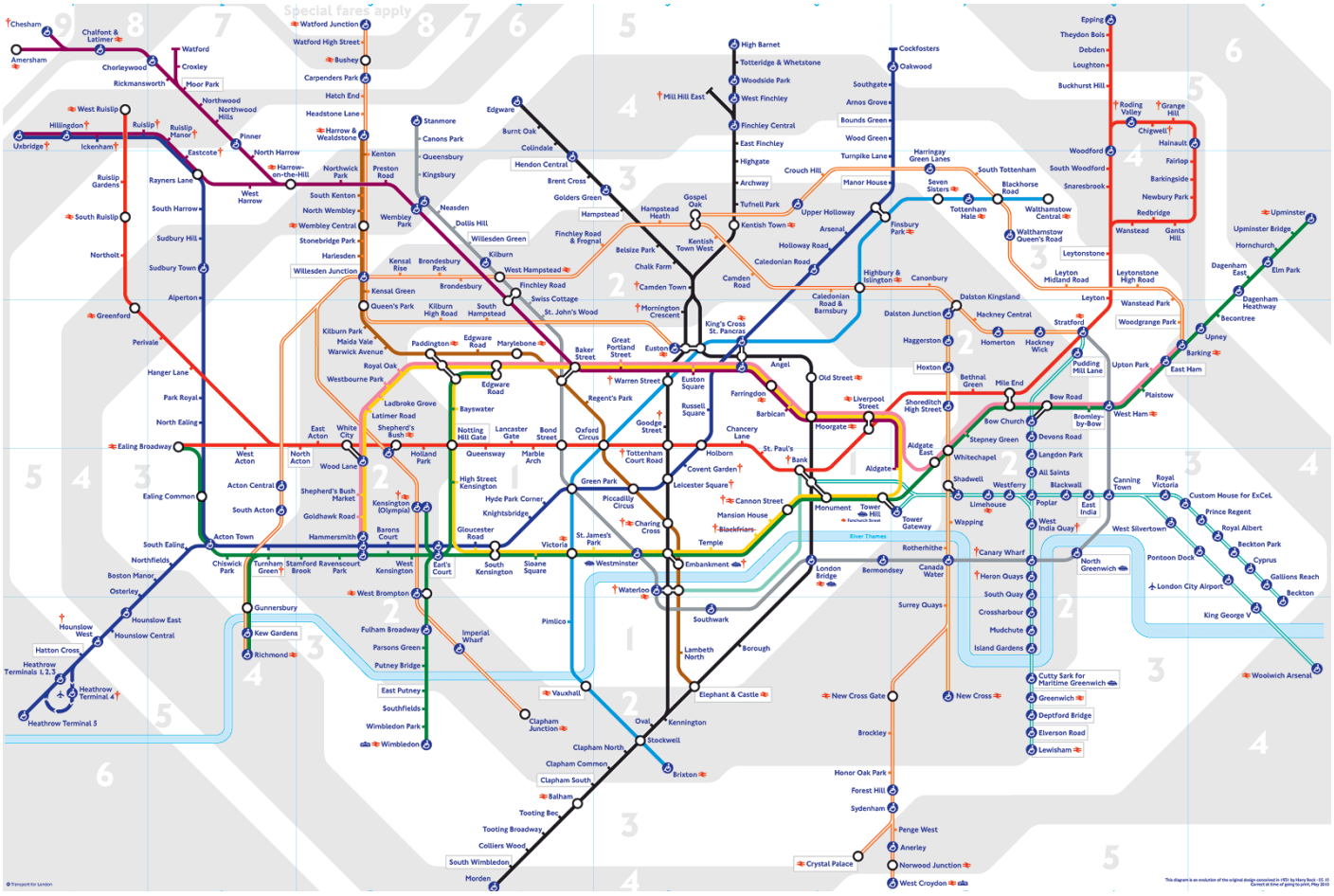

Science: Our new topic is 'animals including humans'.

When living things reproduce they **pass on characteristics** to their offspring. This is known as inheritance. You can find out more here -

https://www.bbc.co.uk/bitesize/topics/zvhhvcw/articles/zp9f4qt

Can you make a list of characteristics humans **can** inherit from their parents and characteristics that are **not** inherited?
Extension: What have **you** inherited from your parents?

Physical Education: The Daily Mile have produced a great site full of fun things to do to help you stay active. Karen would like to know about the sports and activities you are doing at home, if you doing anything fun then message her on Class Dojo!!

1 Use a ruler to measure the perimeter of this shape. What is it?

A 5 cm **B** 15 cm **C** 8 cm **D** 16 cm

2 Which of these is not true?

A To find the perimeter of a rectangle, double the length and add it to double the width.

B To find the perimeter of a square, measure one side length and multiply it by 4.

C To find the perimeter of a rectangle, multiply the length by the width.

D To find the perimeter of a rectangle, measure each of the four sides and add them all together.

3 What is the perimeter of this field?

A 184 m

B 92 m

C 45 m

D 47 m

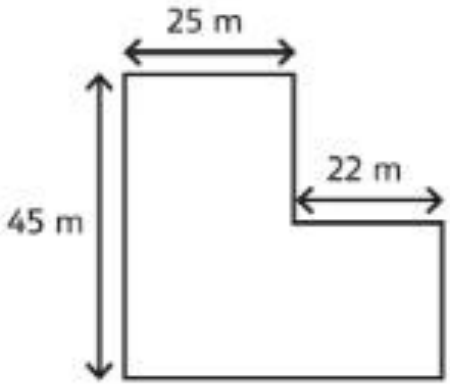

4 A square has a side length of 7 cm. What is its area?

A 28 cm^2 **B** 49 cm^2 **C** 7 cm^2 **D** 49 cm

5 What is the side marked A?

A 3 m

B 5 m

C 7 m

D 10 m

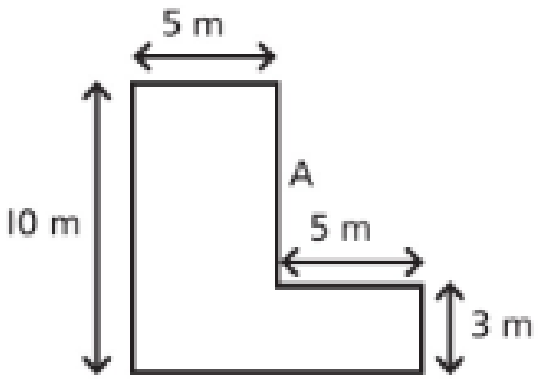

6 A gardener has planted a square flower bed in the middle of a square lawn.

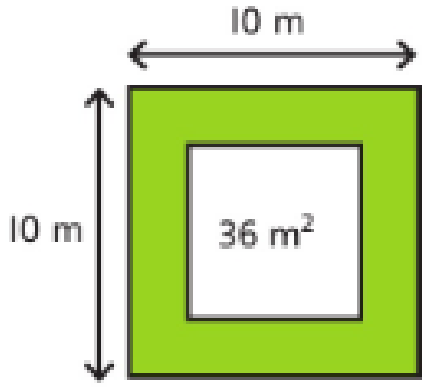

The flower bed has an area of 36 m^2.

The lawn is the shaded area on the diagram.

What is the area of the lawn?

m^2

Hope you all have a safe and happy week,

Mrs Sivell and Ms Cibas